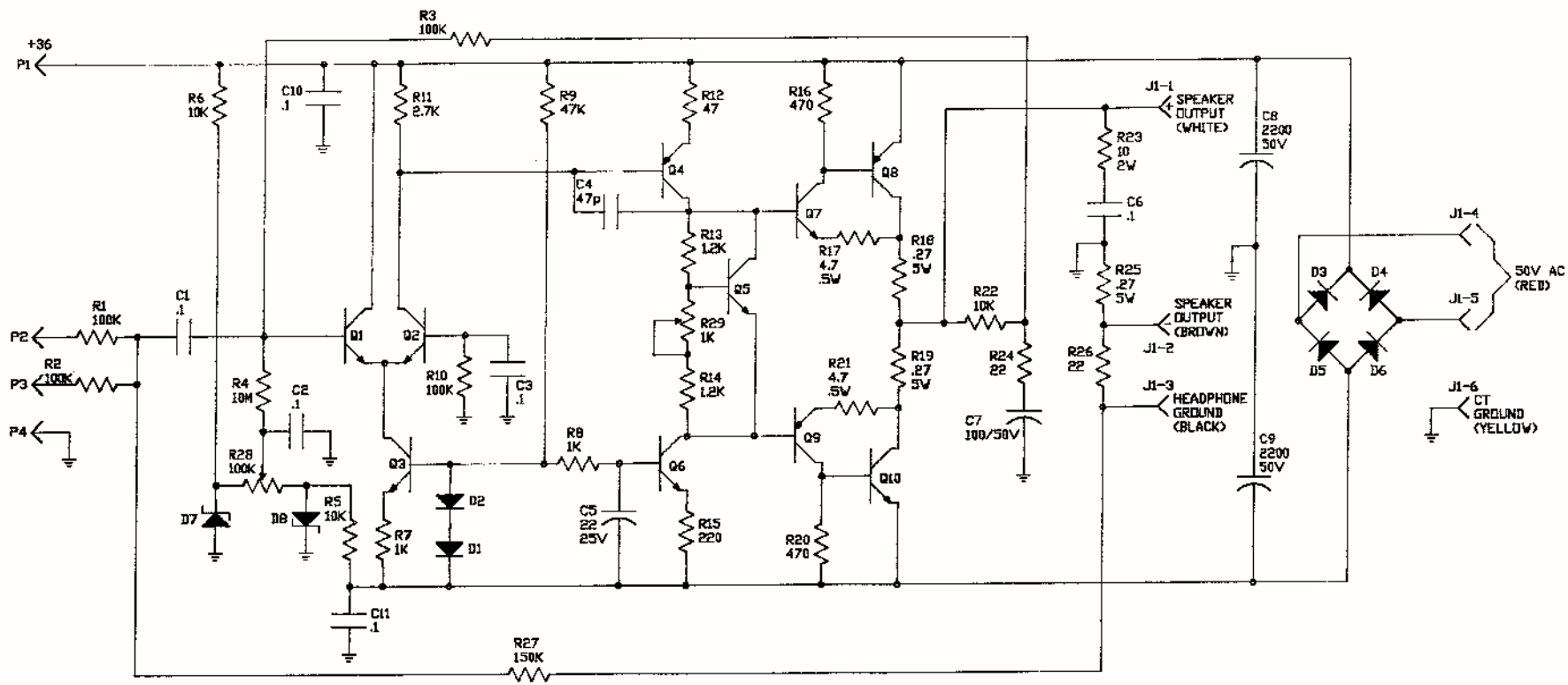

1. ALL RESISTORS IN OHMS. ALL RESISTORS 0.5W UNLESS MARKED OTHERWISE.
2. ALL CAPACITORS IN MICROFARADS UNLESS OTHER PREFIX MARKED, THEN REPLACE PREFIX (MICRO) IN UNIT (MICROFARAD) WITH MARKED PREFIX. ALL CAPACITORS 25V (MINIMUM VOLTAGE RATING) UNLESS MARKED OTHERWISE.
3. ALL VOLTAGES IN VOLTS.
4. TRANSISTORS Q1, Q2: MPSA18.
5. TRANSISTORS Q3, Q6: MPSA06.
6. TRANSISTOR Q4: MPSA56.
7. TRANSISTOR Q5: 2N5088.
8. TRANSISTOR Q7: NSDLU06.
9. TRANSISTOR Q8: TIP42B.
10. TRANSISTOR Q9: MPSU56.
11. TRANSISTOR Q10: TIP41B.
12. DIODES D1, D2: 1N4002.
13. DIODES D3, D4, D5, D6: 1N5401.
14. ZENER DIODES D7, D8: 1N5244B.
15. LAST REFERENCED DESIGNATION ON SCHEMATIC: R25, C11, Q10, D8, P4, J6.

RIC
Rickenbacker International Corp.
3895 S. Main Street
Santa Ana, Ca. 92707
Tel: 714-545-5574 Fax: 714-754-0135

SCHEMATIC, POWER AMP RG15, RG30, RB30

SCALE NA	CHECKED BY J. HALL	DRAWN BY K. MASCARENHAS	
DATE 3/1/89			
SIZE B		DRAWING NO 19325	