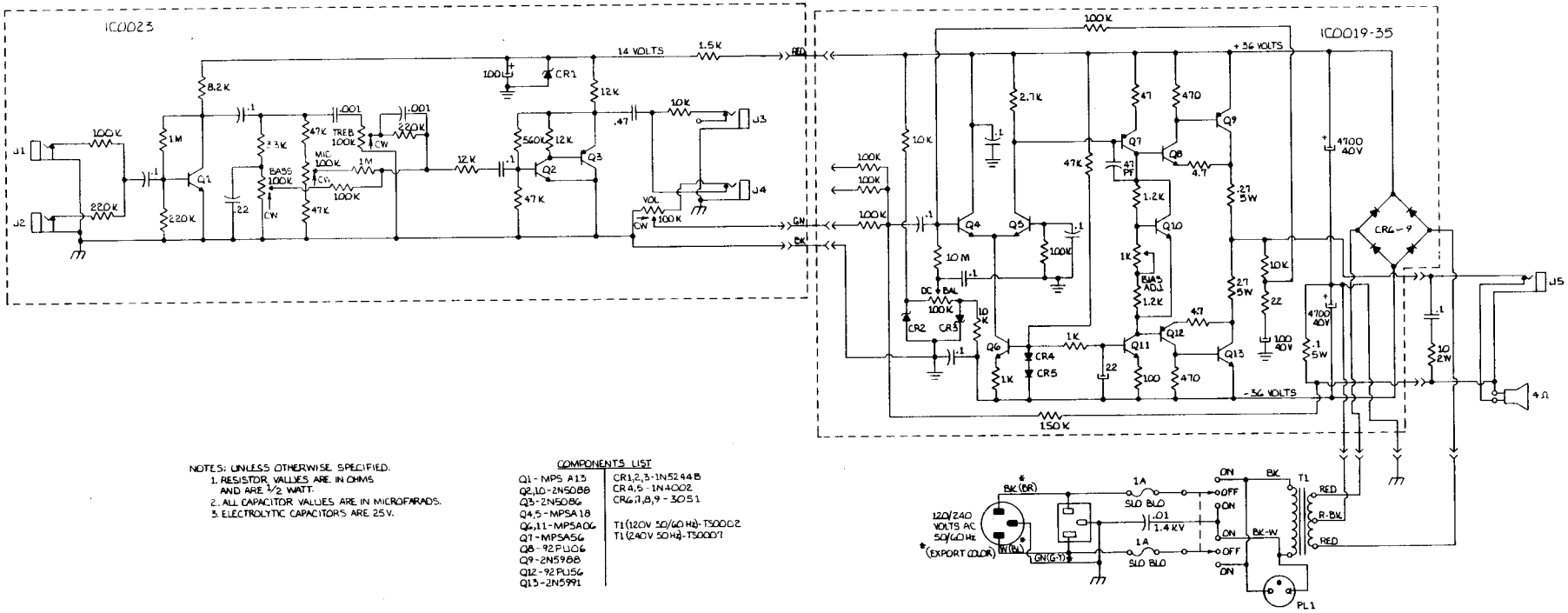

NOTES: UNLESS OTHERWISE SPECIFIED.
1. RESISTOR VALUES ARE IN OHMS AND ARE 1/2 WATT.
2. ALL CAPACITOR VALUES ARE IN MICROFARADS.
3. ELECTROLYTIC CAPACITORS ARE 25V.

COMPONENTS LIST

Q1 - MPS A13	CR1,2,3-1N5244B
Q2,10-2N5088	CR4,5 - 1N4002
Q3-2N5086	CR6,7,8,9 - 3051
Q4,5-MPSA18	
Q6,11-MPSA06	T1 (120V 50/60 Hz)-T50002
Q7-MPSA56	T1 (240V 50 Hz)-T50007
Q8-92PU06	
Q9-2N5988	
Q12-92PU56	
Q13-2N5991	

RICKENBACKER INC.

SCALE: NONE	APPROVED BY:	DRAWN BY S. M.
DATE: 7-8-80		REVISED
SCHEMATIC - TR 35 B		DRAWING NUMBER